rammount.com
1.800.497.7479
support@rammount.com

# RAM® Tough-Mag™ 48MM 4-Point Composite Magnetic Base

ASSEMBLY INSTRUCTIONS

## Parts Index

*** Not to scale**

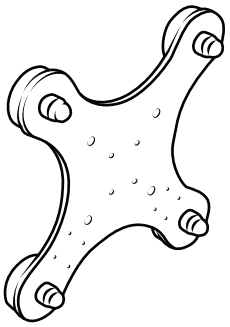

**A**
Base Assembly

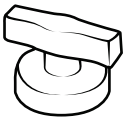

**B**
(x4) Reverse Magnets



**C**
(x8) Sheet Metal Screws
#4 x 3/8”

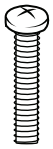

**D**
(x4) Machine Screws
#10-24 x 3/4”



**E**
(x4) Nyloc Nuts
#10-24



**F**
(x4) Rubber Caps

❶ Remove the adhesive from the bottom of the dummy receptacle for the display adapter before securing it to **(A) Base** with **(C) Screws**.

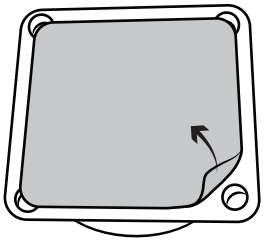

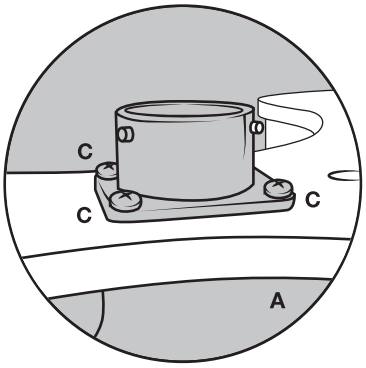


Attached receptacle holds display cable in place while the device is not mounted.

❷ Use **(D) Screws** and **(E) Nuts** to secure the RAM® ball base to **(A) Base.**

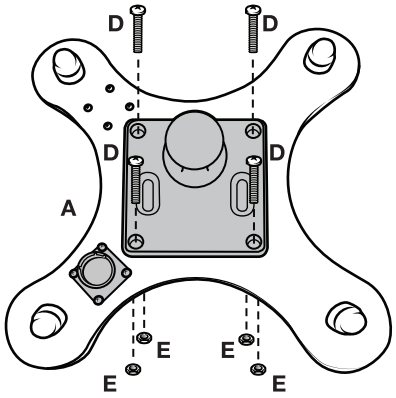


❸ While holding the 4-point base in place, slide **(B) Reverse Magnets** one at a time against the outside of the glass towards each magnet until the 4-point base is secured to the window.

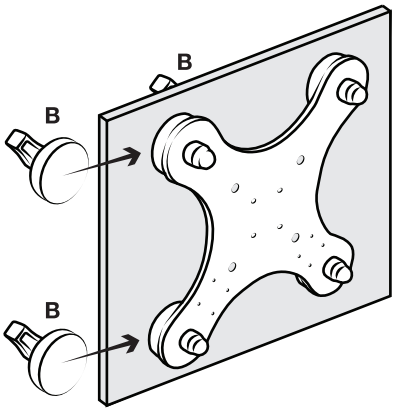


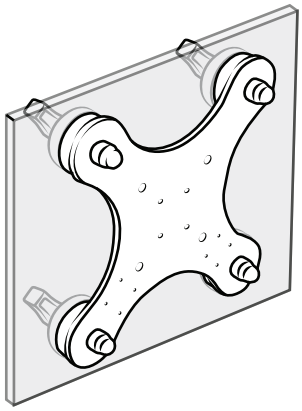

❹ Firmly hold the base of each **(B) Reverse Magnets** while twisting the knob counter clockwise to loosen until removed. Cover each of the exposed threads with **(F) Rubber Thread Caps** by pressing on until flush.

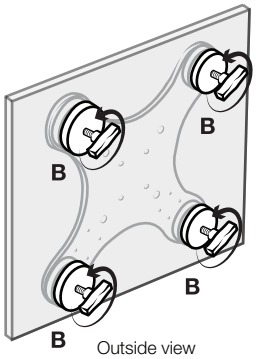


Outside view

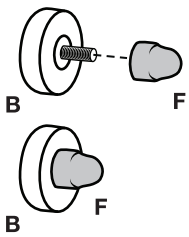


**RMR-INS-MAG48-1**

### Safety Precaution

Do not install this product near or over an airbag deployment area or in a location that obstructs the driver’s vision or interferes with vehicle operation. Electronic devices attached to this product are not to be used while vehicle is in motion. National Products, Inc. does not assume responsibility or liability for any such personal injury, death, or property damage.


This document, including images, may not be reproduced partly or fully without the expressed written consent of National Products, Inc.