REVISIONS			
REV.	DESCRIPTION	DATE	APPROVED

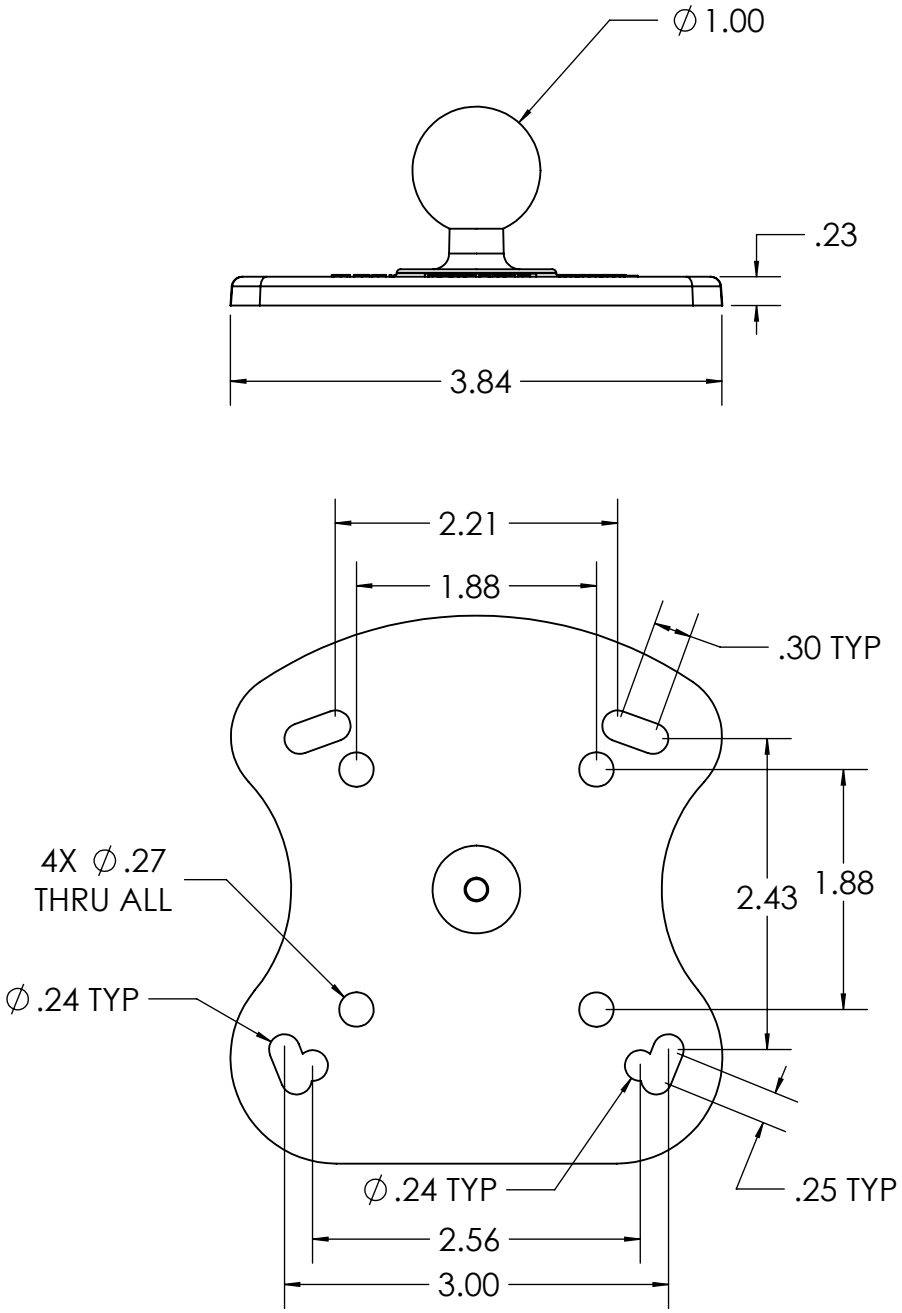

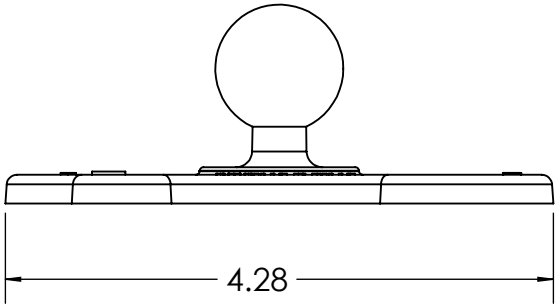

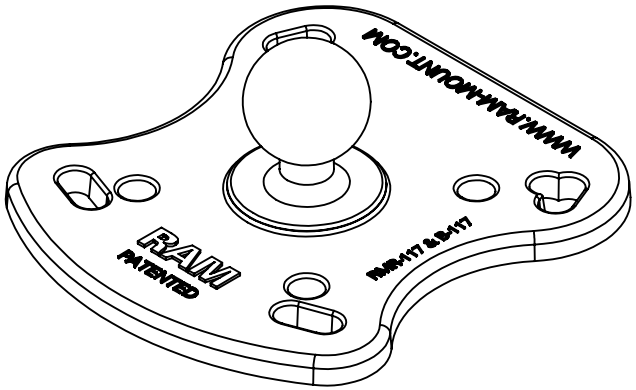

ALL DIMS IN INCHES EXCEPT DIMS IN BRACKETS [] ARE IN MILLIMETERS	TRACKING			NATIONAL PRODUCTS INC.	
TOLERANCES: FRACTIONS ±1/32, DECIMALS .xx±.03 .xxx ±.010, ANGLES ±1°		INITIALS	DATE	RAM BASE WITH 1" DIA. RUBBER BALL HUMMINBIRD, APELCO	
	DRAWN	SG	01/09/2017		
	APPROVED 1				
	APPROVED 2				
MATERIAL	THE INFORMATION CONTAINED IN THIS DRAWINGIS THE SOLE PROPERTY OF NATIONAL PRODUCTS INC. ANY REPRODUCTION IN PART OR WHOLE WITHOUT THE WRITTEN PERMISSION OF NATIONAL PRODUCTS INC. IS PROHIBITED			PART NUMBER RMR-B-107	REV
FINISH				SCALE 2:3	SHEET 1 of 1