THE INFORMATION CONTAINED IN THIS DRAWING IS THE SOLE PROPERTY OF NATIONAL PRODUCTS INC. ANY REPRODUCTION IN PART OR WHOLE WITHOUT THE WRITTEN PERMISSION OF NATIONAL PRODUCTS INC. IS PROHIBITED.

REVISIONS

REV.	DESCRIPTION	DATE	APPROVED

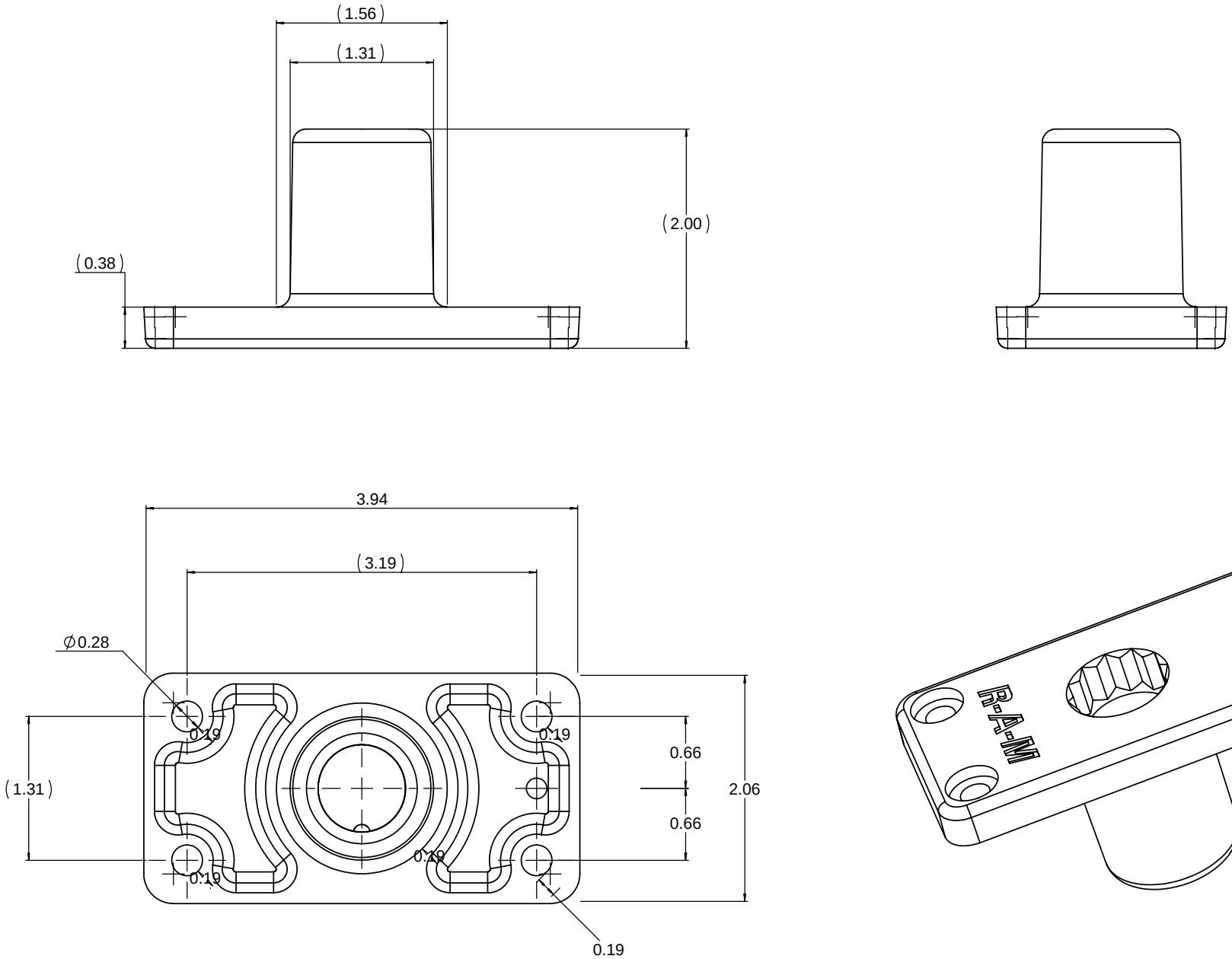

UNLESS OTHERWISE SPECIFIED DIMENSIONS ARE IN INCHES TOLERANCES ARE: FRACTIONS DECIMALS ANGLES + - 1/32 .XX+ - .03 + - 1 DEG. .XXX+ - .010	CAD GENERATED DRAWING. DO NOT MANUALLY UPDATE		NATIONAL PRODUCTS INC.
	APPROVALS	DATE	RAM R0D 2000 FLUSH MOUNT BASE
	DRAWN JDC	09/13/04	
MATERIAL 33% GLASS FILLED NYLON	CHECKED CMR	09/13/04	
	RESP ENG		
FINISH BLACK	MFG ENG		SIZE C DWG. NO. RAM-114-FM REV.
DO NOT SCALE DRAWING	QUAL ENG		SCALE 1 TO 1 CAD FILE: RMR179FM SHEET 1 OF 1