THE INFORMATION CONTAINED IN THIS DRAWING IS THE SOLE PROPERTY OF NATIONAL PRODUCTS INC. ANY REPRODUCTION IN PART OR WHOLE WITHOUT THE WRITTEN PERMISSION OF NATIONAL PRODUCTS INC. IS PROHIBITED.

REVISIONS			
REV.	DESCRIPTION	DATE	APPROVED

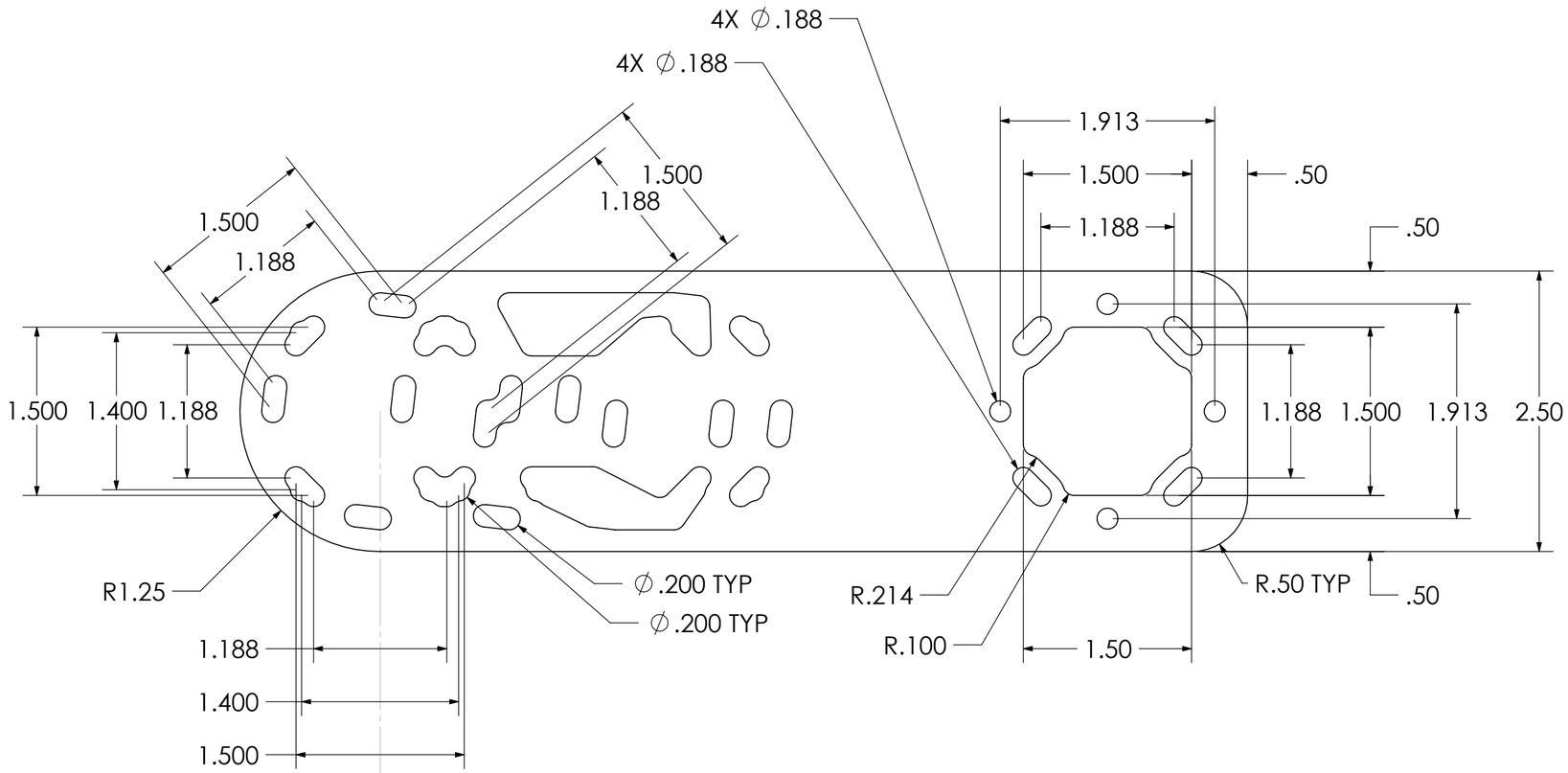

HOLE PATTERN IS REPEATED AT INTERVALS OF 1.15", 2.10", AND 2.62" FROM THIS POINT

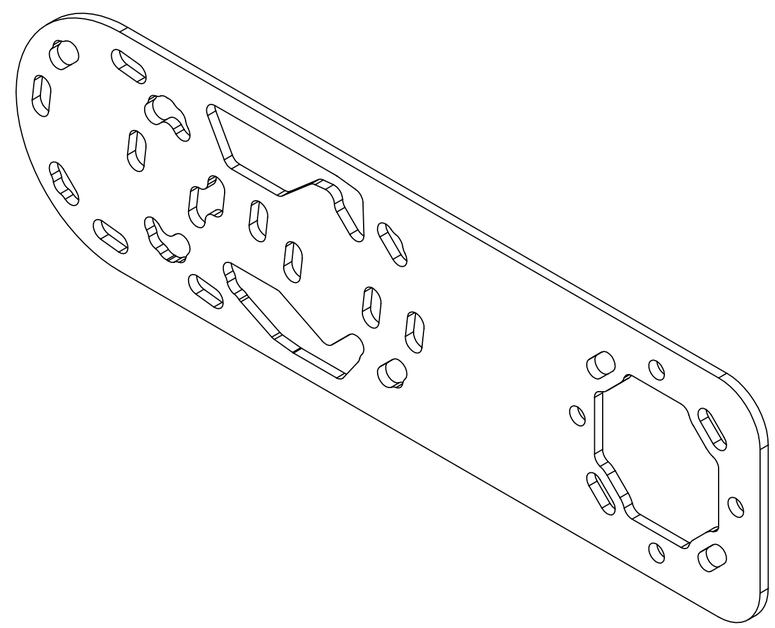

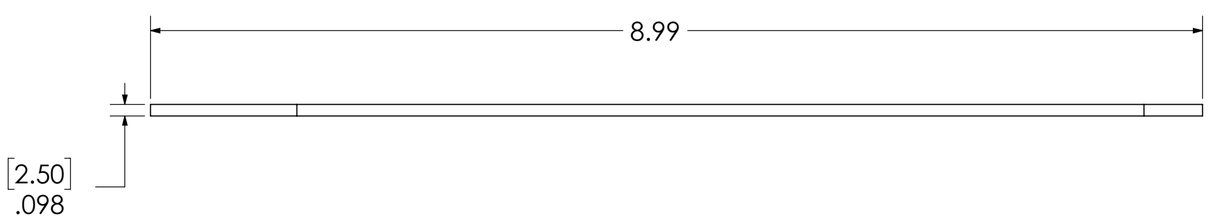

UNLESS OTHERWISE SPECIFIED DIMENSIONS ARE IN INCHES TOLERANCES ARE: FRACTIONS ±1/32 DECIMALS .xx±.03 .xxx ±.010 ANGLES 1°	CAD GENERATED DRAWING, DO NOT MANUALLY UPDATE	NATIONAL PRODUCTS INC.
MATERIAL 2.5 MM THICK MILD STEEL	APPROVALS / DATE	RAM CRADLE ACCESSORY BRACKET 8.99" LONG
FINISH FLAT BLACK TEXTURED POWDER COAT	DRAWN SMG 01/31/18	
DO NOT SCALE DRAWING	CHECKED	SIZE C DWG. NO. RMR-101-MIC1 REV.
	RESP ENG	
	MFG ENG	
	QUAL ENG	SCALE 1 TO 1 CAD FILE: SHEET 1 OF 1